1.0 GENERAL NOTES
- 1.1 ALL METRIC DIMENSIONS ARE IN BRACKETS [X. X]
- 1.2 FOR PATENT INFO: https://www.adwpat.com

2.0 DESIGN NOTES
- 2.1 ANY HAZARDS OR OBSTRUCTIONS TO THE CLIMBING FACILITY AND SAFETY CLIMB MUST BE IDENTIFIED PRIOR TO INSTALLING THE APPURTENANCE. ADDITIONAL PRODUCTS MAY BE REQUIRED TO MAINTAIN THE INTEGRITY OF THE SAFETY CLIMB. DURING INSTALLATION, TEMPORARY AND/OR PERMANENT PRECAUTIONARY MEASURES SHOULD BE TAKEN TO PRESERVE THE CLIMBING FACILITY AND/OR SAFETY CLIMB.

3.0 MANUFACTURING/SPECIAL REQUIREMENTS
- 3.1 TIGHTEN ALL BOLTS 3/8" OR LARGER SECURING FLAT PLATES SNUG TIGHT. TIGHTEN ALL U-BOLTS/THREADED RODS SNUG TIGHT, WITH ATTENTION TO LEAVE EQUAL DISTANCE AND EQUAL FORCE ON EACH LEG OF U-BOLT/THREADED ROD.
- 3.2 SNUG TIGHT IS DEFINED AS THE CONDITION OBTAINED WITH A FEW IMPACTS OF AN IMPACT WRENCH OR THE FULL EFFORT OF AN INSTALLER USING AN ORDINARY SPUD WRENCH TO BRING THE CONNECTED LAYERS (PLIES) OF STEEL INTO FULL CONTACT.
- 3.3 FOR BOLTS IN A PATTERN, TIGHTEN IN A CRISS-CROSS OR STAR SEQUENCE, INCREASING TORQUE IN GRADUAL STEPS UNTIL SNUG TIGHT.

4.0 TEST

5.0 PACKAGING
- 5.1 PACKAGING SHALL MEET ANDREW REQUIREMENTS PER DOCUMENT IS-PL-3005
- 5.2 PRINTED DOCUMENT TO BE PLACED INSIDE POLYBAG AND THEN IN SHIPPING CONTAINER
- 5.3 EXTRA HARDWARE MAY BE SUPPLIED, BAGGED AND SHIPPED

REVISIONS			
REV.	DESCRIPTION	DATE	APPROVED
A	INITIAL RELEASE	ACG 09MAR10	TP
B	UPDATED DRAWING FORMAT TO NEW	JJ1095 09SEP25	BA1025 50104850AMO
C	WB-CY212 (ITEM 2) WAS MTC963101; UPDATED NOTE 3.1	JL1183 25AUG26	BA1025 50109761AMO

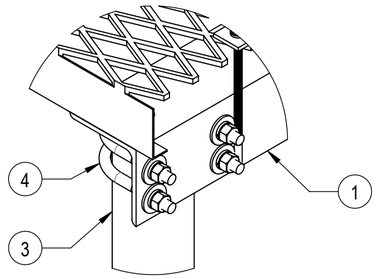

DETAIL A
SCALE 1 : 5

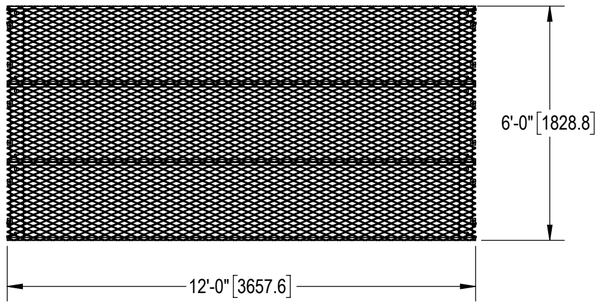

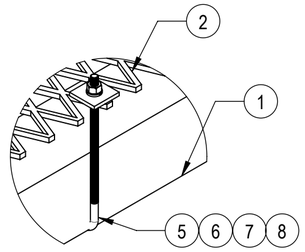

DETAIL B
SCALE 1 : 5

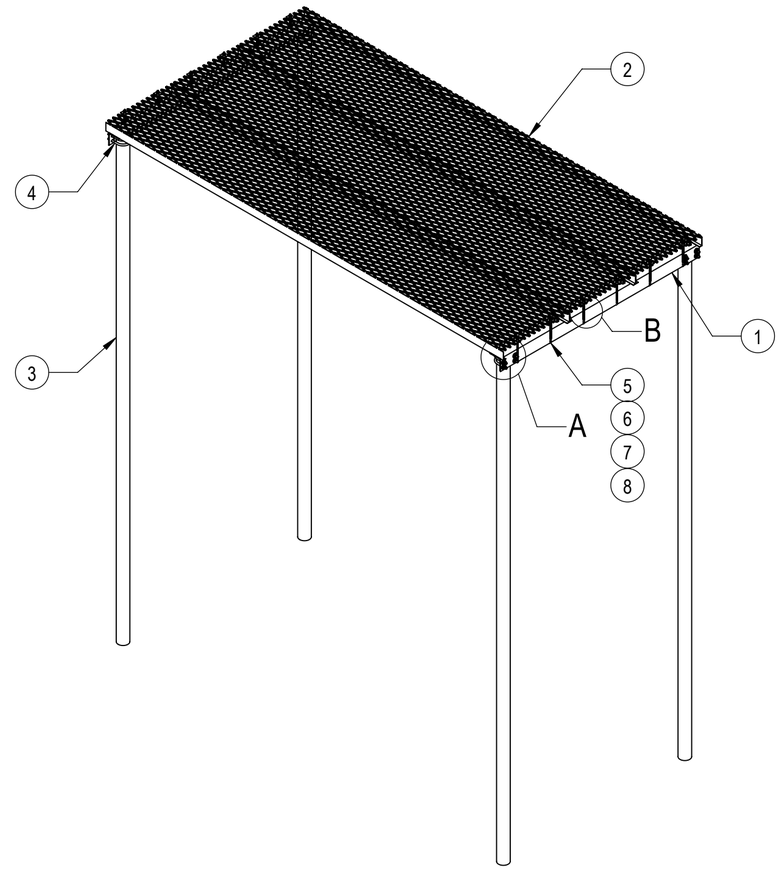

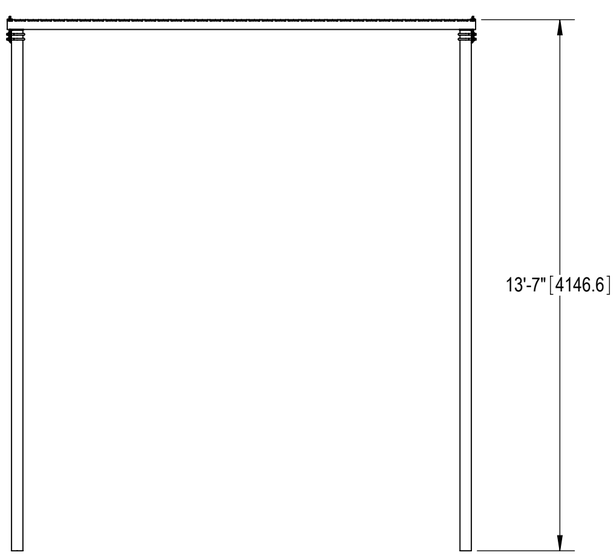

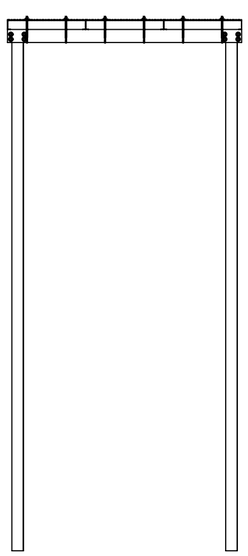

COMPONENT PART NUMBERS PROVIDED FOR ASSEMBLY PURPOSES;
INDIVIDUAL COMPONENTS MAY BE SHIPPED AS PARTS WITHIN AN INCLUDED KIT.

ITEM	PART NO.	DESCRIPTION	QTY.	WEIGHT	NOTE NO.
1	IC0601	6' ICE SHIELD SUPPORT BRACKET	2	38.89 LBS	
2	WB-CY212	SAFETY GRATING,24"X144"	3	96.36 LBS	C
3	MF-130	3.5" O.D. X 13'-4" DIRECT BURIAL PIPE COLUMN	4	57.97 LBS	
4	GUB-4355	1/2" X 3-5/8" X 5" GALV U-BOLT	8	0.71 LBS	
5	GJB0380	8" GALV J-BOLT KIT	12	0.23 LBS	
6	MT-387	SQUARE WASHER 1-1/2"X1-1/2" W/ 7/16 HOLE	12	0.11 LBS	
7	GWL-03	3/8" GALV LOCK WASHER	12	0.01 LBS	
8	GN-03	3/8" GALV HEX NUT	12	0.02 LBS	

Confidential

DENSITY		lbs/in³
MASS	610.27	lbs
VOLUME	2148.97	in³
SURFACE AREA	34451.56	in²
HEIGHT	164.3"	
LENGTH	144.0"	
WIDTH	72.0"	

ANDREW® an Amphenol company

TOLERANCES
1 PLACE .X[.X] ± 0.2[6.3]
2 PLACE .XX[.X] ± 0.12[3.0]
3 PLACE .XXX[.X] ± 0.060[1.5]
ANGLES ± 2°

SAP MATERIAL MASTER: **IC-0612-B**

FINISH

MATERIAL

UNLESS OTHERWISE SPECIFIED DIMENSIONS ARE IN INCHES INTERPRET PER ANSI Y 14.5M-1994

	NAME	DATE
CE	ACG	03/09/2010
RW	JL1183	09/02/2026
AD	YMENG	09/10/2026
RE	YMENG	09/17/2026
ECN	50109761AMO	

TITLE: **6' X 12' ICE CANOPY**

SCALE: **1:36**

DOCUMENT NO.: **IC-0612-B**

SIZE	Auth Group	INSL	MODEL			DRAWING			SHEET
			VERSION	STATUS	REVISION	VERSION	STATUS	REVISION	
C			01	RE	B	02	RE	C	1 OF 1