REVISIONS			
REV.	DESCRIPTION	BY	DATE
A	INITIAL RELEASE	MJP	11/17/23

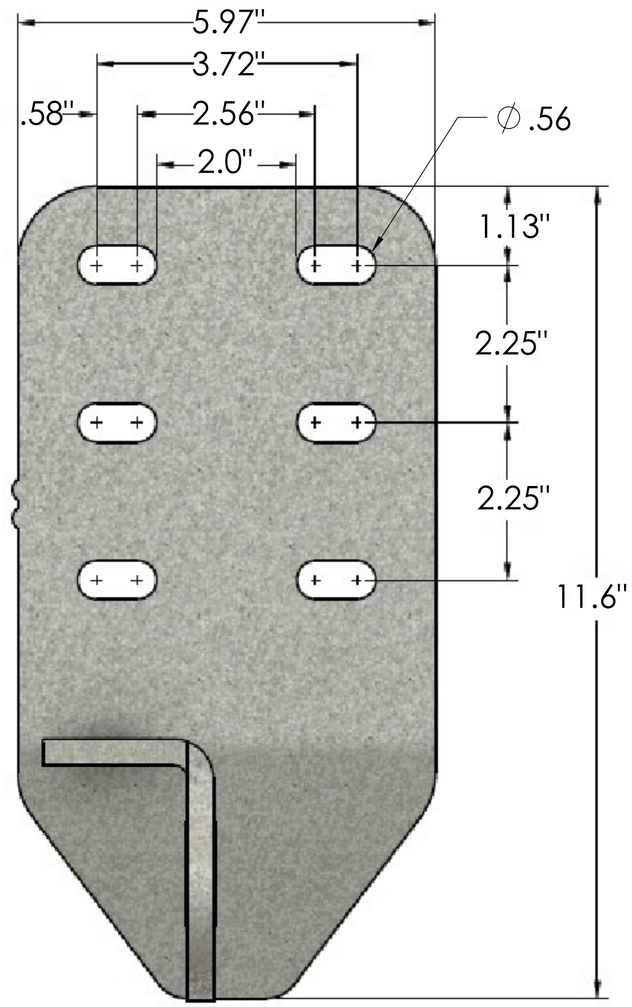

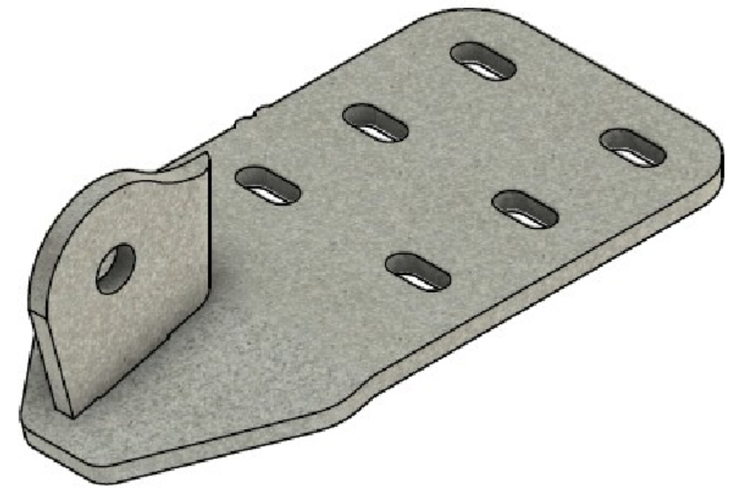

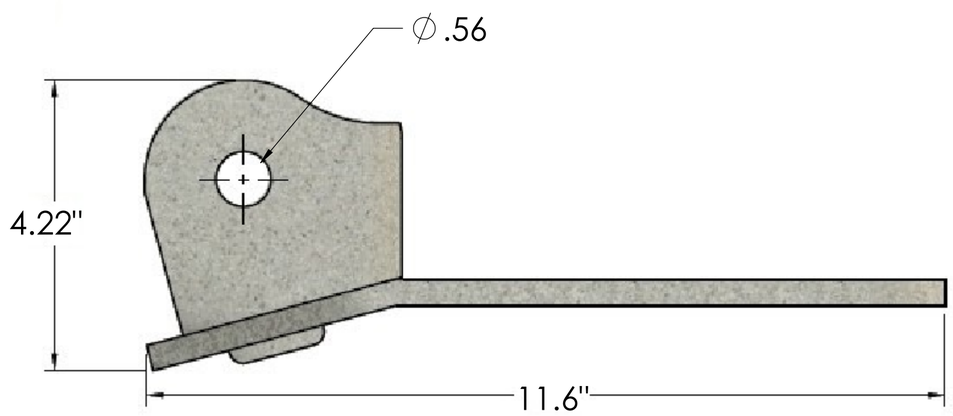

ESTECH
ESTECHINNOVATIONS.COM - NIXA, MD

ANDREW® an Amphenol company

TOLERANCES			
1 PLACE .X ±	SEE NOTE 1	3 PLACE .XXX ±	
2 PLACE .XX ±		ANGLES ±	

SAP MATERIAL MASTER

FINISH

MATERIAL

UNLESS OTHERWISE SPECIFIED DIMENSIONS ARE IN INCHES INTERPRET PER ANSI Y 14.5M-1994

	NAME	DATE
CE		
RW		
AD		
RE		
ECN		

TITLE

U-BLADE-MF-2T3

SCALE 1:42

DOCUMENT NO. U-BLADE-MF-2T3

DENSITY	lbs/in³
MASS	lbs
VOLUME	in³
SURFACE AREA	in²
HEIGHT	
LENGTH	
WIDTH	

SIZE C

Auth Group

MODEL			DRAWING			SHEET
VERSION	STATUS	REVISION	VERSION	STATUS	REVISION	1 OF 1