REVISION
B

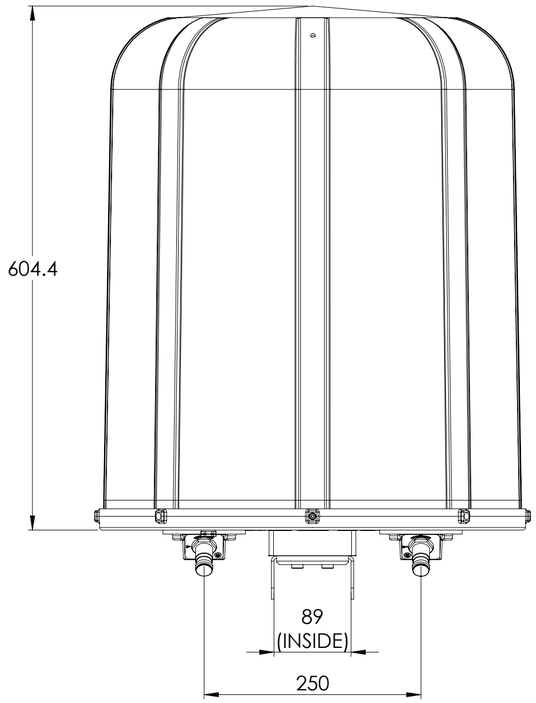

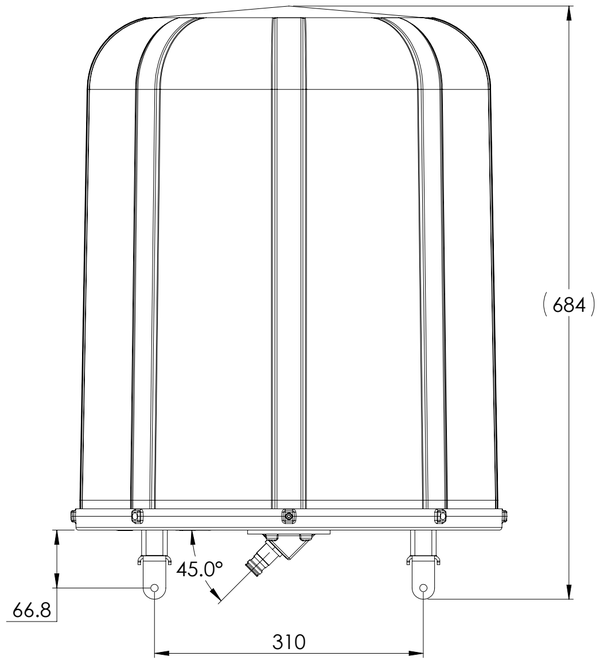

A A

V17-010-01-A0-E

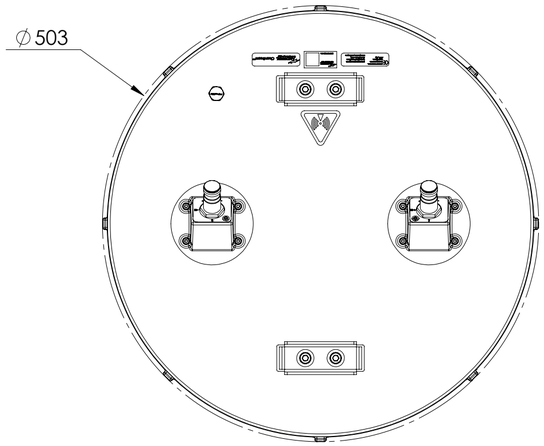

VIEW A-A

SCALE 1 : 5

© 2026 ANDREW, an Ampenol company. All rights reserved.